AdderLink X-Series

USB Extender

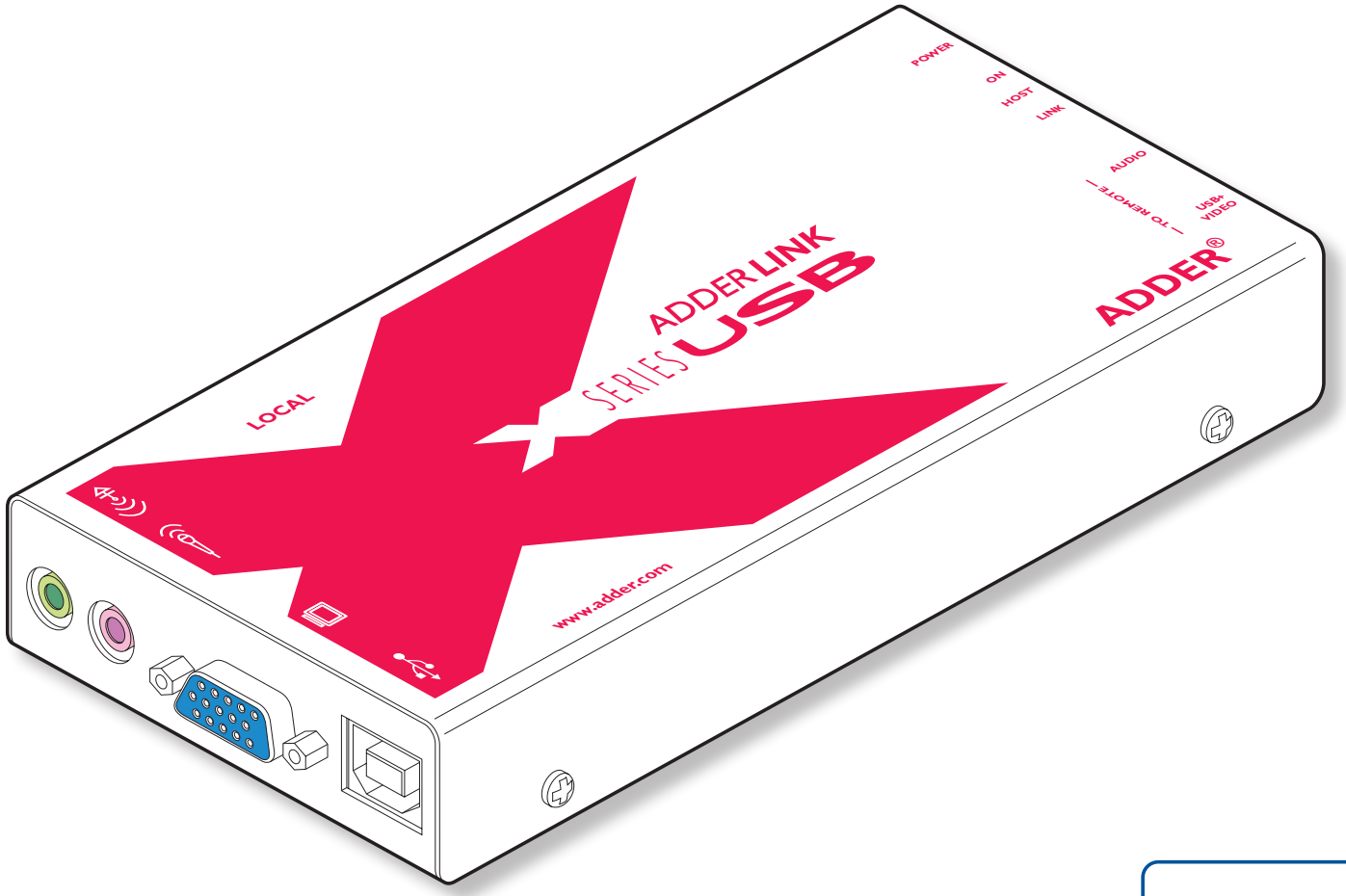

CONTENTS

Contents

Welcome

Introduction 2
Supplied items 3

Installation

Mounting a module – desk or rack 4
Connections 5
Connections at the LOCAL module 5
Video 5
USB 6
Audio 6
Link connection(s) 7
Optional power supply 7
Connections at the REMOTE module 8
Video monitor 8
USB devices (including keyboard & mouse) 8
Audio connections 9
Link connection(s) 9
Power supply 10

Operation

General use 11
Power surge fuses 11
Power and activity indicators 11
Signal loss compensation 12
Video signal boost 12
Multi frequency video boost 12
High frequency video boost 12
Microphone signal boost 13

Further information

Troubleshooting 14
Getting assistance 14
Radio Frequency Energy 16

Welcome

Introduction

Thank you for choosing the AdderLink X-Series USB extender set. These compact modules allow you to extend the distance between any system and its peripherals by up to 100 metres. In addition to transferring video signals, the extender units provide four USB ports and microphone input as well as stereo speaker output.

In a straightforward setup procedure, one module connects to the system while the other is situated next to the user and attaches to the various peripherals. The two modules are then linked by one or two standard CAT-5 twisted pair cables: one to carry video and USB data, the other to (optionally) transfer microphone and speaker signals.

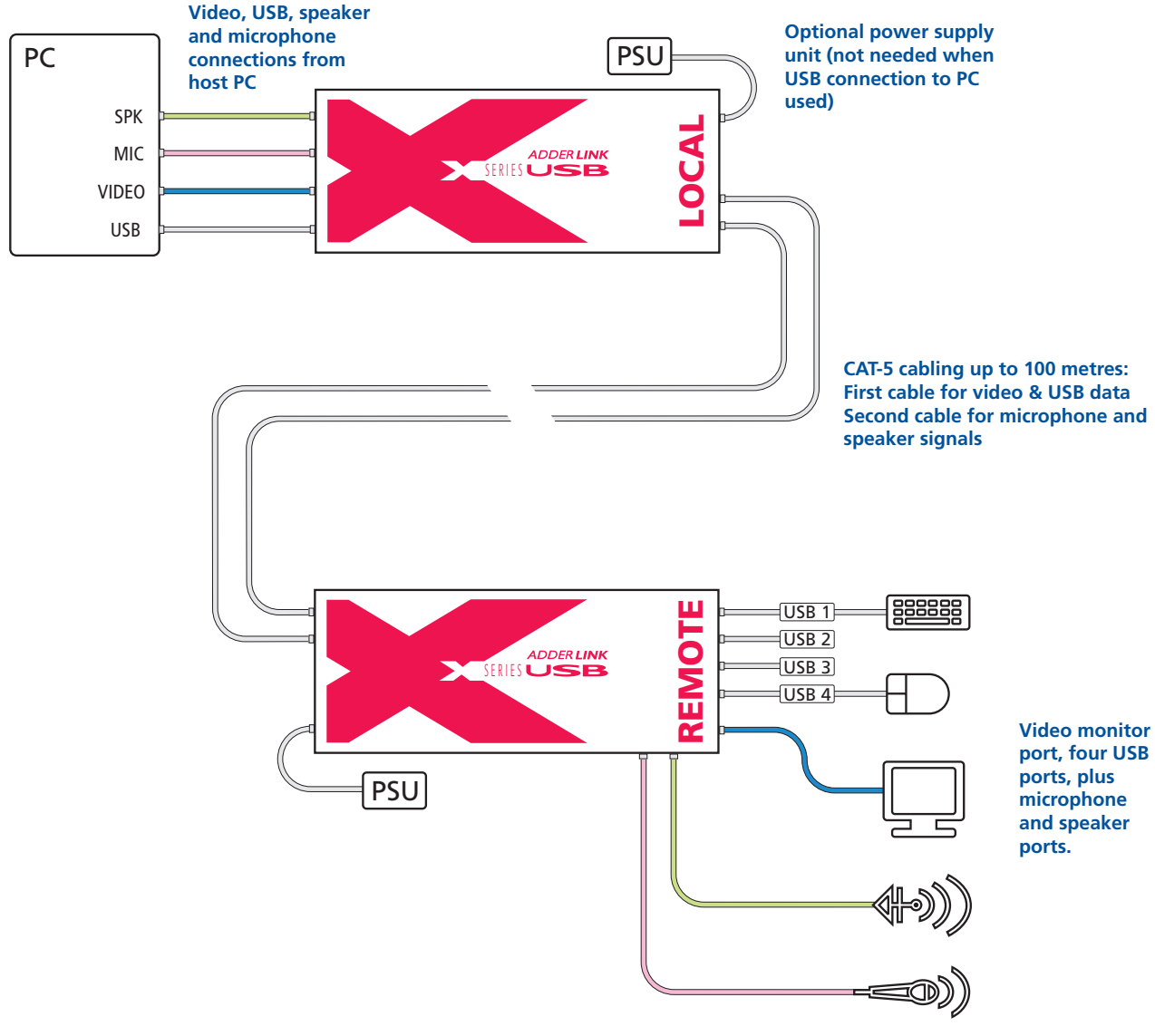

Supplied items

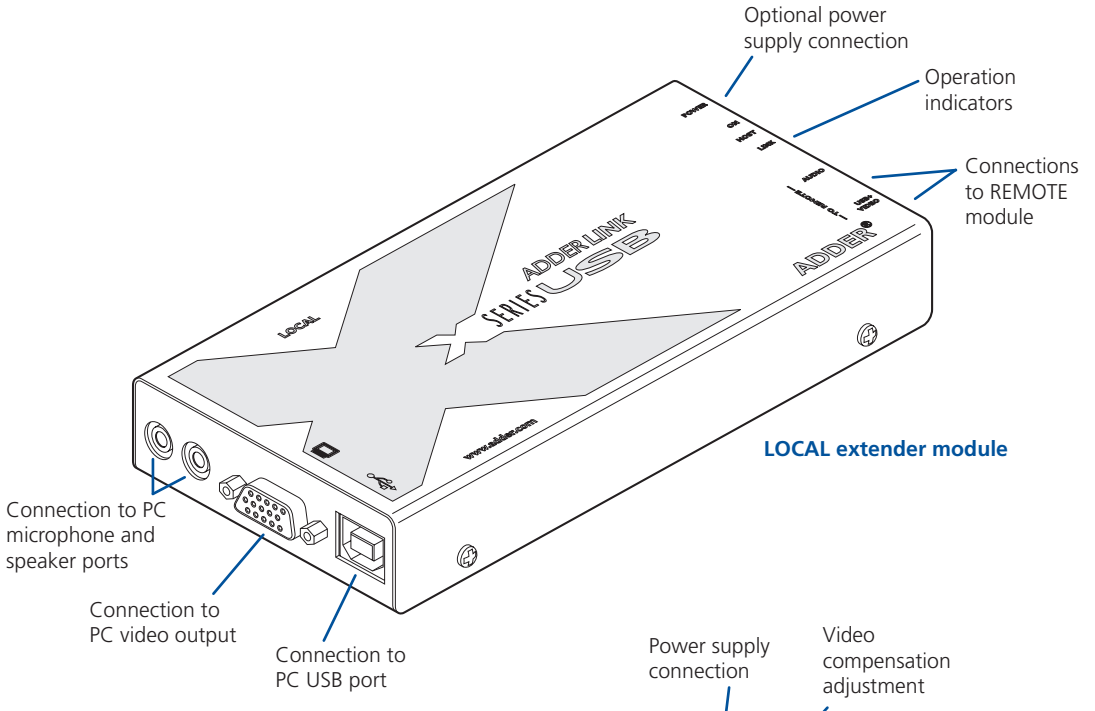

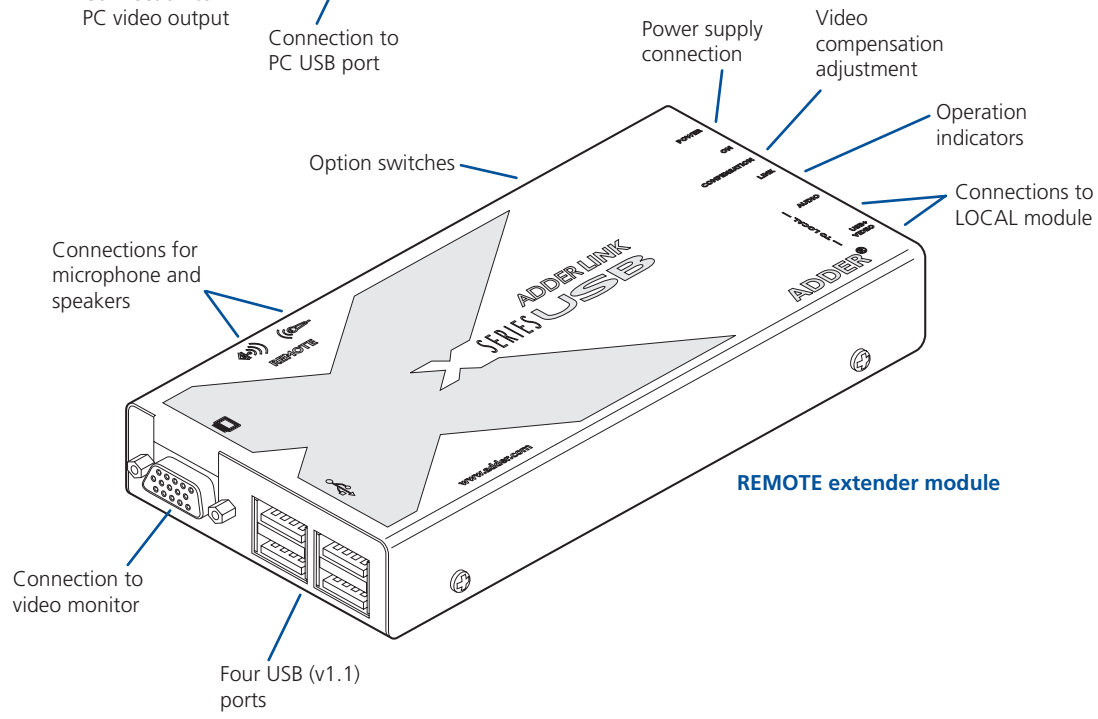

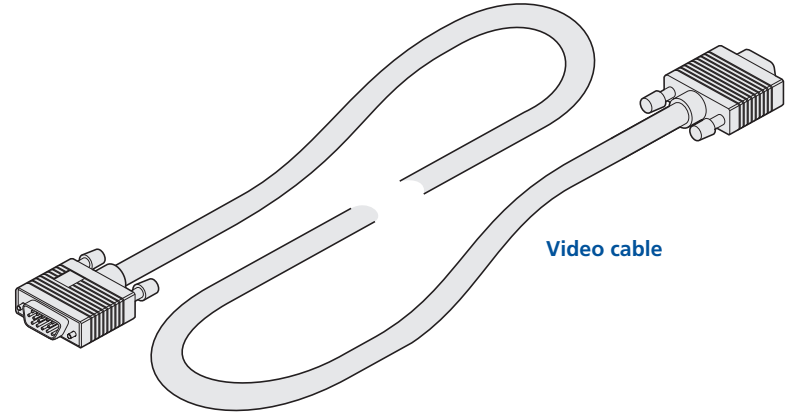
Video cable

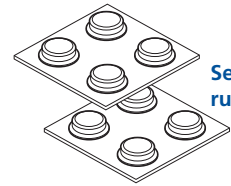
Self adhesive rubber feet

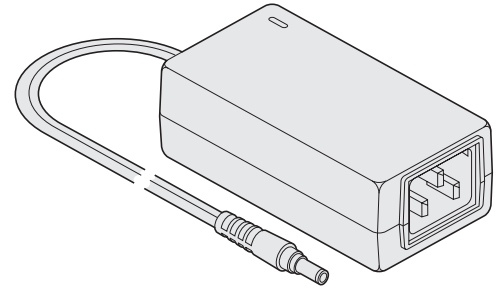
Power supply plus mains cable

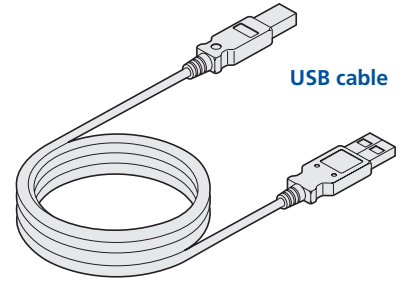
USB cable

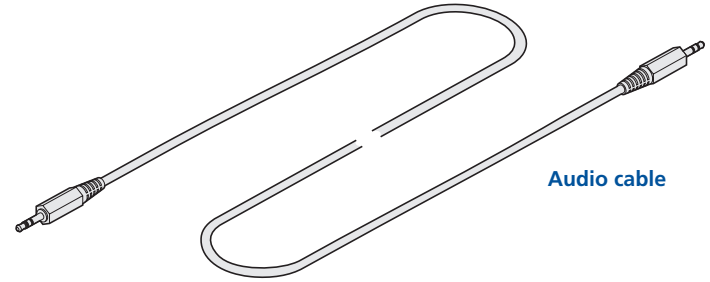
Audio cable

Installation

The installation of the USB Extender set is straightforward and can best be achieved in most cases by following these stages for each module:

- Mount the module
- Connect the cables

Mounting a module – desk or rack

The USB Extender modules can be situated on a desk (or floor) or alternatively, for larger installations, mounted within optional rack mount chassis units.

Desk mount

Apply the supplied self-adhesive rubber feet to the underside of the module(s).

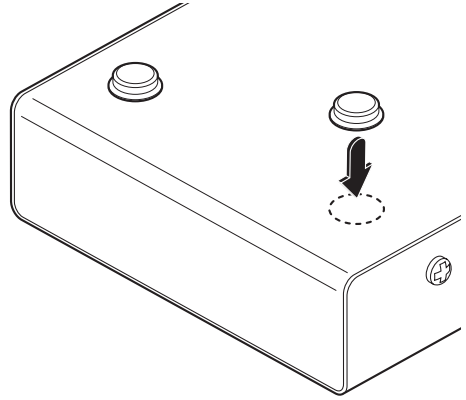

Rack mount

Note: The module switches are not accessible once it is inserted into the rack, therefore, check all settings before insertion.

1. Place the rack securing plate (available as a separate kit) onto the front of the module and secure it with the two countersunk screws.
2. Orient the module on its side so that its labelled face is the correct way up and the securing plate is facing away from the rack.
3. Slide the module into the required rack position. The rectangular cut-out in the front upper lip of the rack allows the two screws on the module's upper edge to slide through.
4. The rack mount chassis has a series of holes in its floor that are spaced to accommodate the two screws on the module's lower edge. Ensure that the screws correctly locate into the two holes of the chosen slot. The rack securing plate on the module should now be flush with the front of the rack mount chassis.
5. Use the third (pan-head) screw, in the top hole of the rack securing plate to fasten the module to the rack.

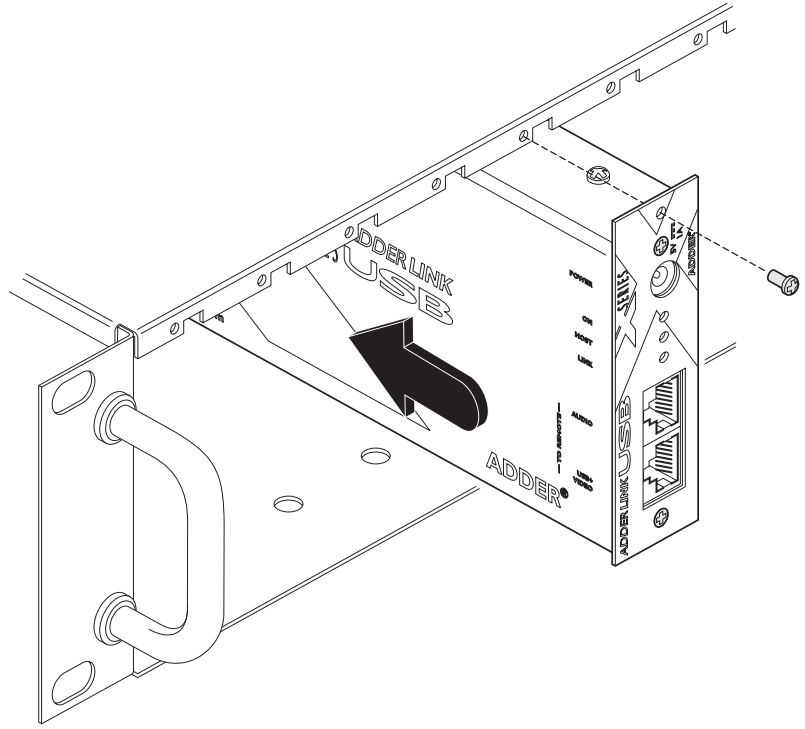

Connections

The naming of the LOCAL and REMOTE modules relate to their proximity to the computer system.

LOCAL Module connects to the PC

REMOTE Module connects to the peripherals by the user

Hence, the LOCAL module connects directly to the system, while the REMOTE is at the other end of the twisted pair cable(s) and attaches to the video monitor, USB peripherals and sound equipment.

Connections at the LOCAL module

When using the full capabilities of the X-Series USB extender modules, the following connections are made to the LOCAL module:

- Video - see right
- USB
- Audio
- Twisted pair link(s)
- Optional power supply

Cables can be attached in any order, not necessarily the order shown in this section.

Note: Wherever possible, ensure that the PC system is switched off when connecting cables.

Installation Advice

- For correct operation, the local and remote units must have ground connections. At the computer end, this is achieved by ensuring that the computer or KVM switch that the AdderLink is connected to has a ground connection. At the keyboard / monitor / mouse end, this can be achieved by ensuring that the AdderLink's power supply is connected to a grounded power outlet. Alternatively, a ground connection will be made via the monitor, if the monitor is itself grounded.
- Try to avoid laying the interconnect cable alongside power cables where possible.

Video

1 Locate the supplied video cable and attach one end to the connector marked on the LOCAL module.

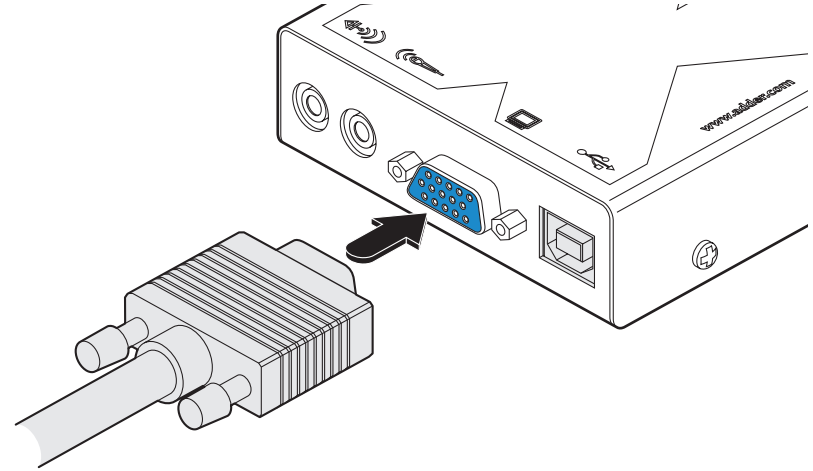

2 Attach the other end of the video cable to the video output port of the host PC.

USB

1 Locate the supplied USB cable and insert the smaller connector into the LOCAL module socket marked •⭠.

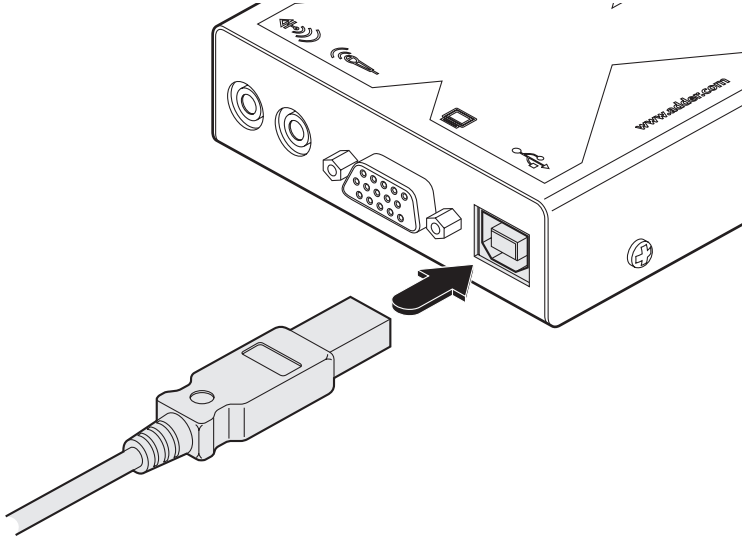

2 Attach the other end of the USB cable to one of the USB sockets of the host PC.

Note: When connected to a USB port of the PC, the LOCAL module does not require the use of a power supply unit (the REMOTE module, however, always requires a power supply).

Audio

1 Locate the supplied audio cable and attach one end to the required jack socket marked ◁|•))) (speaker) or ((◁▷ (microphone) on the LOCAL module (if you need to simultaneously use the speaker and microphone connections, a second audio link cable will be needed).

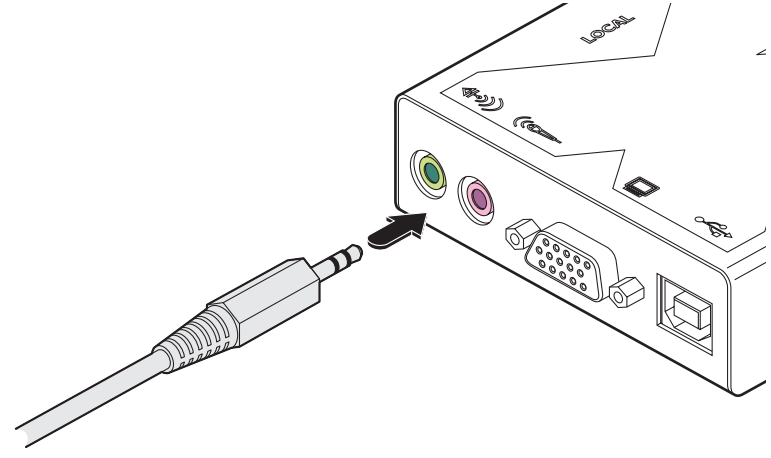

2 Insert the plug at the other end of the audio cable to appropriate socket on the PC system:

- Microphone sockets are often coloured pink
- Speaker sockets are often coloured light green.

Link connection(s)

Links between the LOCAL and REMOTE modules are made via one (or two) twisted pair cables, specified to Category 5 or higher. Ensure that the total twisted pair cable length for each connection (including patch boxes) does not exceed 100 metres.

- When extending only video and USB, only a single link cable is required.
- When extending video, USB and audio signals, two link cables are required.

Video and USB link cable

1 Insert the connector from the primary twisted pair cable link into the LOCAL module socket marked 'USB + VIDEO'.

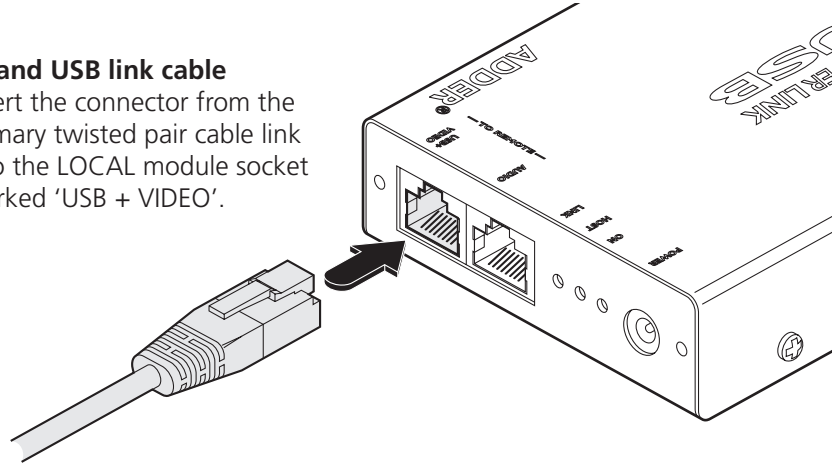

Audio link cable

Required only when using microphone and/or speakers.

1 Insert the connector from the secondary twisted pair cable link into the LOCAL module socket marked 'AUDIO'.

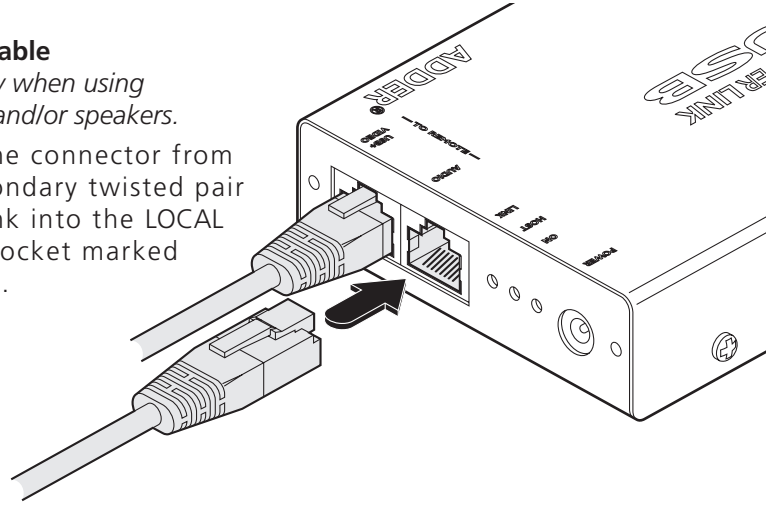

Optional power supply

A power supply is only required by the LOCAL module when no USB connection is made to the USB port of the PC.

1 Attach the output connector of the power supply to the LOCAL module socket marked 'POWER'.

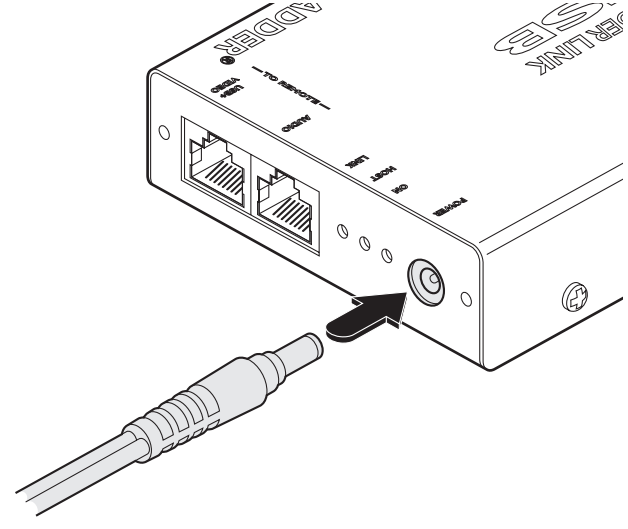

2 Insert the IEC connector of the supplied power lead into the corresponding socket of the power supply. Connect the other end of the power lead to a nearby mains socket.

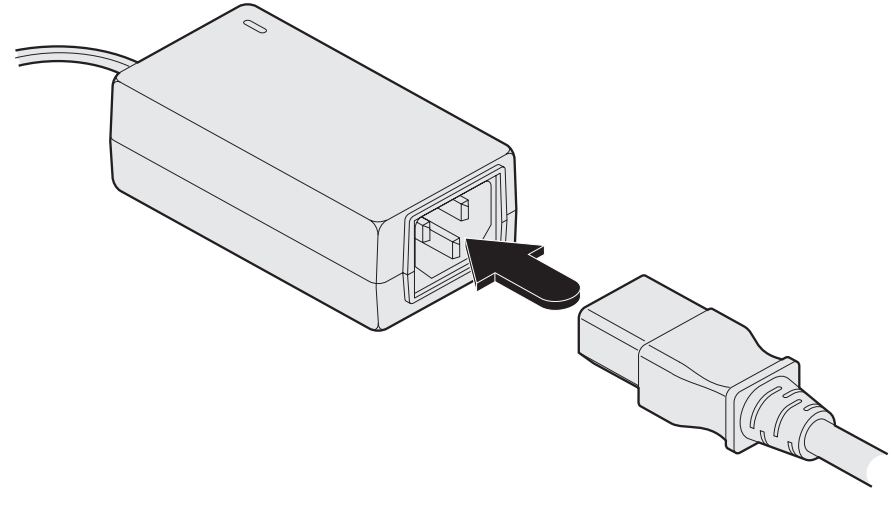

Connections at the REMOTE module

When using the full capabilities of the X-Series USB extender modules, the following connections are made to the REMOTE module:

- Video monitor - see below
- USB devices - see below
- Audio (microphone and speakers)
- Link connection(s)
- Power supply

Cables can be attached in any order, not necessarily the order shown in this section.

Video monitor

1 Attach the lead from the monitor to the REMOTE module socket marked 🖵.

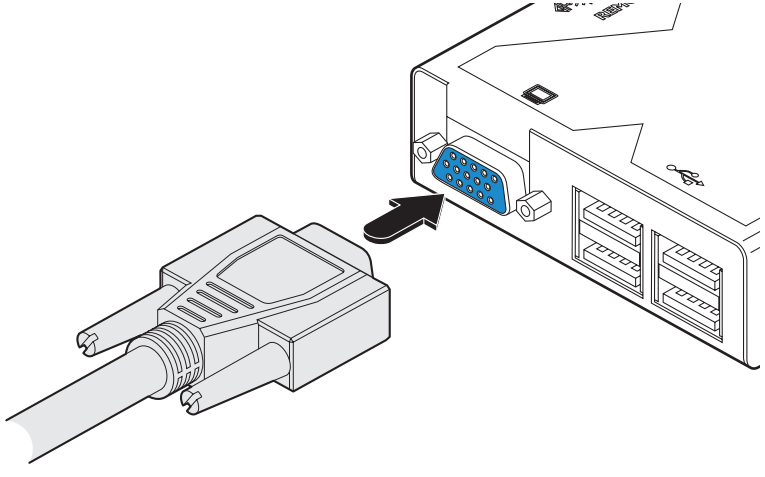

USB devices

The REMOTE module contains a USB hub that provides four separate USB 1.1 channels.

1 Attach the leads from up to four USB devices to the REMOTE module sockets marked •⇆.

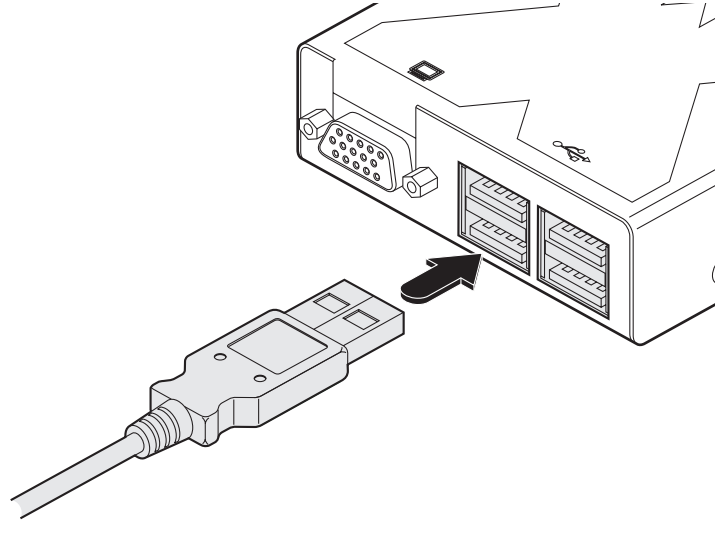

Audio connections

Audio connections are available at the two 3.5" jack sockets mounted on the side (same side as the switch bank) of the REMOTE module.

Note: When the REMOTE module is rack mounted, audio connections must be made after the module has been fixed in place. Access is required to the rear and above the rack. Remember to remove any audio connections before attempting to slide out the REMOTE module.

1 Make the required audio connections according to the corresponding connection(s) at the LOCAL module.
   - Microphone connections are made to the REMOTE module socket marked
   - Speaker connections are made to the REMOTE module socket marked

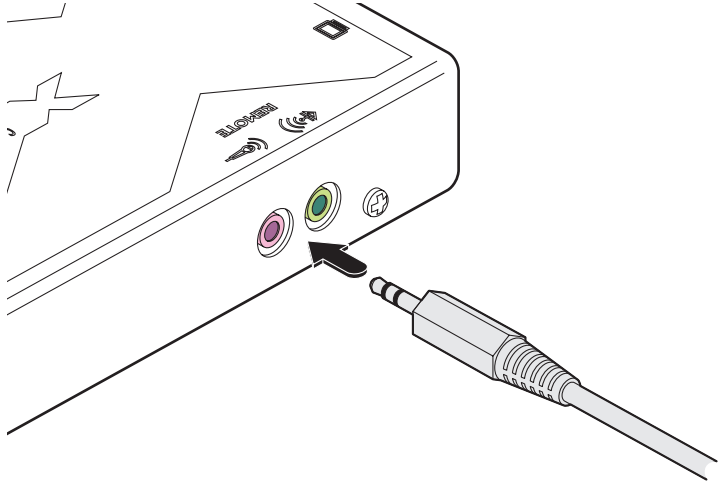

Note: The REMOTE module provides a signal boost feature to assist with unresponsive microphones. See Microphone signal boost *for details.*

Link connection(s)

Links between the REMOTE and LOCAL modules are made via one (or two) twisted pair cables, specified to Category 5 or higher. Ensure that the total twisted pair cable length for each connection (including patch boxes) does not exceed 100 metres.

- When extending only video and USB, only a single link cable is required.
- When extending video, USB and audio signals, two link cables are required.

Video and USB link cable

1 Insert the connector from the primary twisted pair cable link into the REMOTE module socket marked 'USB + VIDEO'.

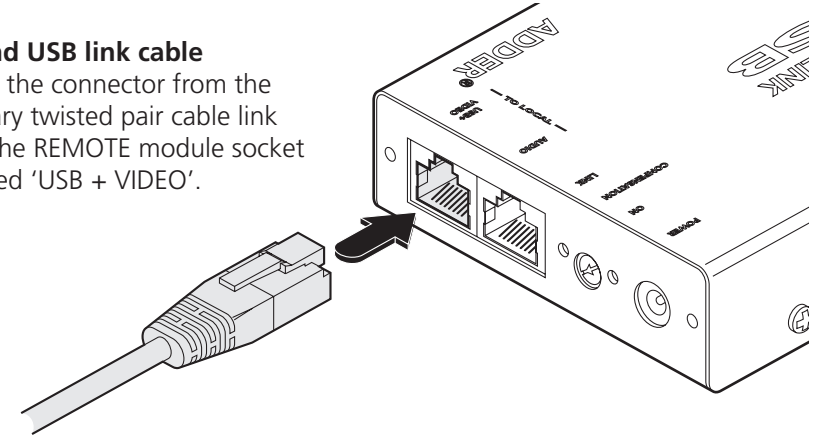

Audio link cable

Required only when using microphone and/or speakers.

1 Insert the connector from the secondary twisted pair cable link into the REMOTE module socket marked 'AUDIO'.

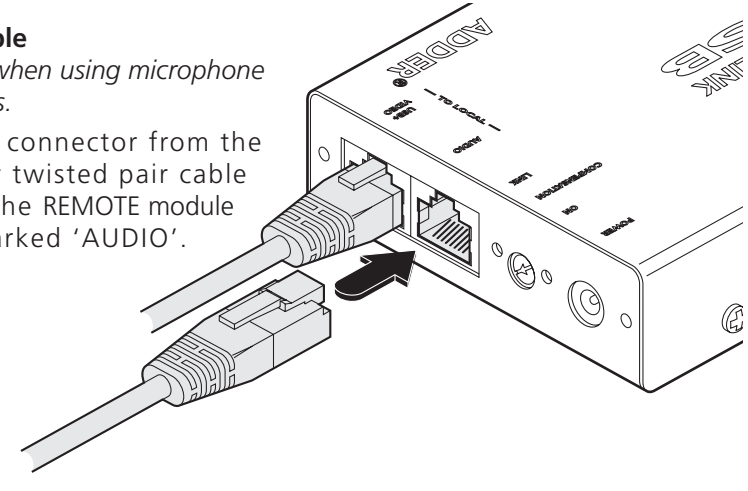

Power supply

A power supply is always required by the REMOTE module.

1 Attach the output connector of the power supply to the REMOTE module socket marked 'POWER'.

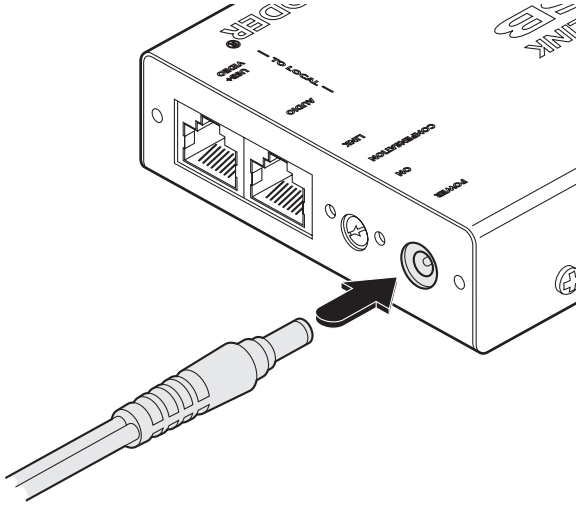

2 Insert the IEC connector of the supplied power lead into the corresponding socket of the power supply. Connect the other end of the power lead to a nearby mains socket.

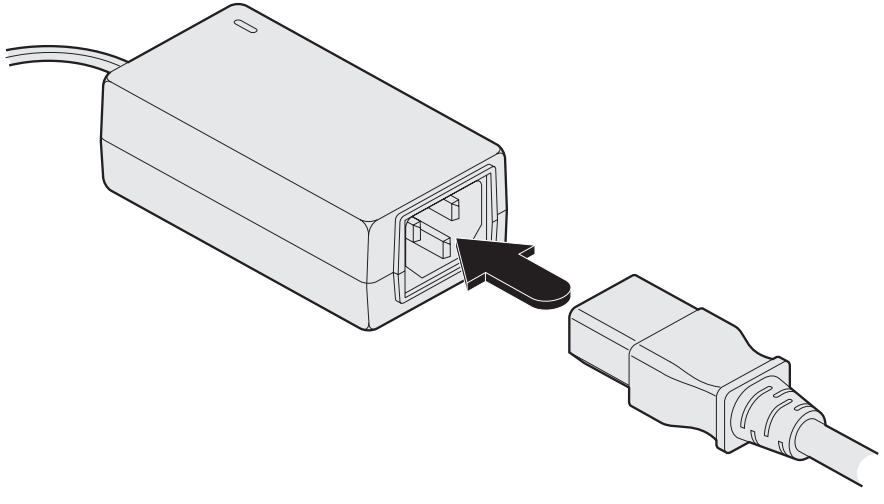

Operation

General use

In use, the USB Extender modules should be transparent - the system and its peripherals should operate exactly as normal, the only difference being that they are now up to 100 metres apart.

In some installations, you may see some 'shadows' to the right of high contrast screen characters. This can be caused by signal loss over long distances (or low quality link cables) or by incorrect video signal compensation settings - see the Signal loss compensation section for details.

Power surge fuses

Both modules contain internal automatic cut-out fuses to protect against power surges.

If a module stops responding

- Check whether the module's ON indicator is lit. If the ON indicator is lit, then the problem is unlikely to be power related, check all the connections.
- If the module ON indicator is not lit, check the indicator on its power supply, or for the LOCAL module, check that the PC is operating and the USB link is still connected.
- If the power supply indicator is lit, or the PC is operating (with the USB link intact), then the anti-surge surge fuse may have been tripped. Reset the anti-surge fuse, as detailed next.

To reset an anti-surge fuse

Remove the power connection (or, for an unpowered LOCAL module, the USB connection) from the module for one second and then reconnect.

Power and activity indicators

The front panels of both modules feature recessed indicators to provide confirmation of power and activity.

LOCAL module

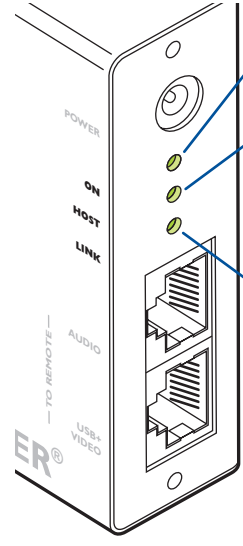

ON
Lit whenever power (from the PC USB port or optional power supply) is present.

HOST
Lit whenever a USB host (PC) is connected and at least one device is attached at the REMOTE module. This indicator will flicker when an active PC host is connected, but will darken if there is no remote USB device.

LINK
Lit when a physical link exists between the LOCAL and REMOTE modules.

REMOTE module

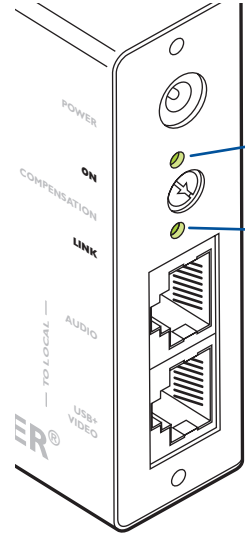

ON
Lit whenever power from the power supply is present.

LINK
Lit whenever a USB host (PC) is connected at the LOCAL module and at least one device is attached at the REMOTE module. This indicator will flicker when an active PC host is connected, but will darken if there is no USB device connected at the REMOTE module.

Signal loss compensation

Analog signals such as video and audio are susceptible to the effects of cable resistance. When transmitted over long distances the degradations can begin to produce noticeable results. To maintain a high quality service, the X-Series USB extender modules feature both video and microphone signal loss compensation features.

Video signal boost

Two separate boost features are available to ensure that the video signal remains as crisp and clear as possible:

- **Multi frequency video boost** - this feature boosts all video frequencies to counter the general effects of long cable runs. This boost feature is adjusted using the small switches along the side of the REMOTE module.
- **High frequency video boost** - this feature affects only the higher video frequencies that face additional degradation over long spans. This boost feature is adjusted using the recessed dial at the front end of the REMOTE module.

  Note: If the video image remains fuzzy or distorted after applying both types of boost, then there may be a 'skew' problem. This is caused by uneven lengths within the twisted pairs of the link cables. To rectify such a problem you may need to install an Adder Skew Compensator (part number: X-SC).

Multi frequency video boost

The function of the multi frequency boost is rather like that of a monitor's contrast control. It should be set to according to the preference of the user, but these REMOTE module switch settings offers a rough guideline:

Link cable length	Switch 2	Switch 3
0 - 25 metres	OFF	OFF
25 - 50 metres	OFF	ON
50 - 75 metres	ON	OFF
75 - 100 metres	ON	ON

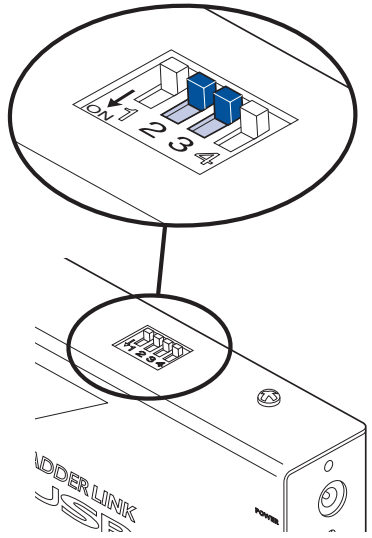

High frequency video boost

This feature provides an extra boost for high frequency video signals which are most greatly affected by cable losses. Before using this feature, ensure that the multi frequency boost has been set for the approximate cable length.

To adjust high frequency video boost

1 Display a high contrast image with vertical edges on the remote monitor:
   - Open a word processor, type the capital letter 'H', or 'M' and increase the point size to 72 or higher. For best results, the background should be white and the character should be black.

2 Insert a small flat-bladed screwdriver into the slot of the small recessed dial on the REMOTE module, marked 'COMPENSATION'.

3 Slowly turn the dial while viewing the screen image, until the vertical edges of the test pattern are crisp and clear with no shadowing:
   - A BLACK shadow to the right of the character indicates UNDER compensation - turn the dial clockwise to increase boost.
   - A WHITE shadow to the right of the character indicates OVER compensation - turn anti-clockwise to decrease boost.

   Note: If you apply too much boost, the monitor may go blank. Turn the dial anti-clockwise until the image returns.

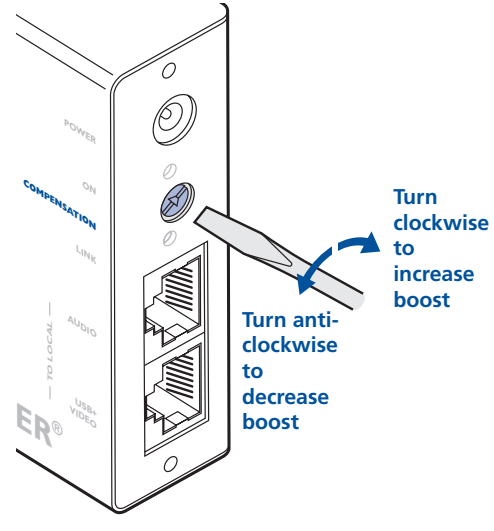

Microphone signal boost

Most microphones function perfectly well with the standard amplification provided by the X-Series USB extenders, however, less responsive microphones may require an extra boost. This feature boosts the microphone signal by roughly ten times.

Microphone signal boost	Switch 1
Disabled	OFF
Enabled	ON

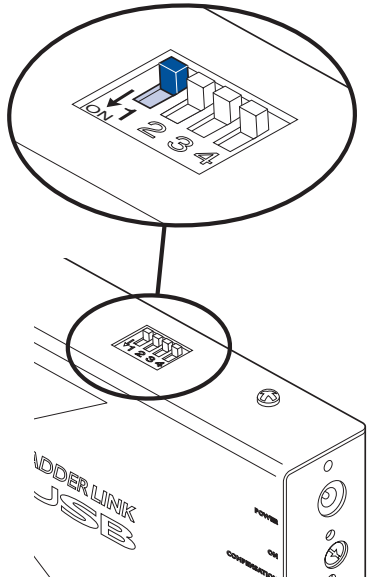

Note: Switch 4 is reserved for future use and currently has no function. It should remain switched OFF.

Further information

Troubleshooting

If you experience problems when installing or using the X-Series USB extender modules, please check through this section for a possible solution. If your problem is not listed here and you cannot resolve the issue, then please refer to the 'Getting assistance' section.

Video image at the REMOTE module is distorted or shadows appear to the right of displayed objects.
Video compensation is required to adjust for the length of the link cable being used. If video problems persist:

- Please refer to the Video signal boost section.
- If the overall video image is 'fuzzy' and/or has coloured shadows you may need to use the optional X-Series Skew Compensator (part number: X-SC). This standalone passive module allows you to finely tune the red, green and blue video signal timings (each of which is fed along separate twisted pairs) to overcome most colour separation problems.

No video image is received at the REMOTE module.

- Check that the power/activity indicators are lit on the LOCAL and REMOTE modules - if they are not, then there is a power problem.
- If the REMOTE module is severely over compensated, the monitor may not be able to display a picture. Try using a small flat-bladed screwdriver to turn the recessed dial anti-clockwise to reduce the video compensation. See the Video signal boost section for details.
- Check that the USB + VIDEO link cable (Category 5 or higher) is wired correctly. See the Connections section for details.
- If possible, try using an alternative USB + VIDEO link cable between the modules.
- Temporarily disconnect the video link to the LOCAL module, connect a monitor directly to the computer video port and check for a correct video image output.

Sound from the microphone cannot be heard or is very quiet

- Try changing the setting of REMOTE module switch 1 to ON.

USB devices work intermittently or not at all

- Check that the link cables do not exceed 100 metres in length (including patch boxes). Longer cable runs will induce errors that disturb USB operation.
- If possible, try a different link cable to see whether operation returns to normal.
- Minimise close contact of the link cables with other cables or devices carrying high voltages. Such sources can induce interference into the link cable.

Power is applied via the power supply but REMOTE module operation has stopped.

- Each module has an internal automatic cut-out fuse to protect against power surges. To reset, remove power from the module for one second and then reconnect. To reset an unpowered LOCAL module, remove and then replace the USB connection. See the Power surge fuses section for details.

Getting assistance

If you are still experiencing problems after checking the list of solutions in the Troubleshooting section then we provide a number of other solutions:

- Adder Technology website – www.adder.com
  Check the Support section of our website for the latest solutions.
- Email support@adder.com
- Fax in the UK: **01954 780081**
  in the US: **+1 888 275 1117**
- Phone in the UK: **01954 780044**
  in the US: **+1 888 275 3337**

Other products in the X-Series range

The following related X-Series items are also available:

- Gold Extender (part code: X-KVMAS)

  This pair of modules allow you to extend not only keyboard, video and mouse signals up to 200 metres, but also similarly support microphone, stereo speaker and an RS232 serial channel.

- Dual video transmitter (part code: X-DVT)

  Allows one system to be controlled from two locations or permits a second video channel to be sent to a remote location. Used in conjunction with two standard receiver/remote modules.

- Remote receiver module (part code: X-KVM/R)
  Two of these are required, one at the end of both remote cable spurs emanating from the Dual Video Transmitter. These modules convert the coded signals from the Dual Video Transmitter back into native formats used by keyboards, video monitors and mice.

- Skew compensator (part code: X-SC)

  Removes colour split in video signals caused by certain Cat 5e and 6 cables. Required only in certain installations with long cable lengths and high video resolutions.

- Rack mount chassis (part code: RMK-CHASSIS)

  This 19" chassis allows multiple X-Series modules to be neatly arranged within a standard cabinet. Securing plates and screws are supplied separately for each X-Series module for use with the rack mount chassis.

- Power distribution module (part code: X-PDM4)

  Provides power for up to four X-Series modules to reduce mains power socket requirements.

- Rack mount securing plates
  - for USB Extender (part code: X-RMK-USB)
  - for Gold Extender remote module (part code: X-RMK-KVMAS/R)
  - for Gold Extender local module (part code: X-RMK-KVMAS/T)
  - for Dual Video Transmitter (part code: X-RMK-DVT)
  - for Skew compensator (part code: X-RMK-SC)
  - single slot blanking plate (part code: X-RMK-BLANK)
  - quad slot blanking plate (part code: X-RMK-BLANK4)

Safety information

- For use in dry, oil free indoor environments only.
- Do not use to link between buildings.
- Ensure that the twisted pair interconnect cable is installed in compliance with all applicable wiring regulations.
- Do not connect the CATx link interface (RJ45 style connector) to any other equipment, particularly network or telecommunications equipment.
- Warning – the power adapter contains live parts.
- No user serviceable parts are contained within the power adapter - do not dismantle.
- Plug the power adapter into a socket outlet close to the AdderLink unit that it is powering.
- Replace the power adapter with a manufacturer approved type only.
- Do not use the power adapter if the power adapter case becomes damaged, cracked or broken or if you suspect that it is not operating properly.
- If you use a power extension cord with the AdderLink, make sure the total ampere rating of the devices plugged into the extension cord do not exceed the cord's ampere rating. Also, make sure that the total ampere rating of all the devices plugged into the wall outlet does not exceed the wall outlet's ampere rating.
- Do not attempt to service the AdderLink yourself.
- The AdderLink units and power supplies can get warm in operation – do not situate them in an enclosed space without any ventilation.
- The AdderLink does not provide ground isolation and should not be used for any applications that require ground isolation or galvanic isolation.

Warranty

Adder Technology Ltd warrants that this product shall be free from defects in workmanship and materials for a period of two years from the date of original purchase. If the product should fail to operate correctly in normal use during the warranty period, Adder will replace or repair it free of charge. No liability can be accepted for damage due to misuse or circumstances outside Adder's control. Also Adder will not be responsible for any loss, damage or injury arising directly or indirectly from the use of this product. Adder's total liability under the terms of this warranty shall in all circumstances be limited to the replacement value of this product. If any difficulty is experienced in the installation or use of this product that you are unable to resolve, please contact your supplier.

Radio Frequency Energy

A Category 5 (or better) twisted pair cable must be used to connect the AdderLink units in order to maintain compliance with radio frequency energy emission regulations and ensure a suitably high level of immunity to electromagnetic disturbances.

All other interface cables used with this equipment must be shielded in order to maintain compliance with radio frequency energy emission regulations and ensure a suitably high level of immunity to electromagnetic disturbances.

European EMC directive 89/336/EEC

CE

This equipment has been tested and found to comply with the limits for a class A computing device in accordance with the specifications in the European standard EN55022. These limits are designed to provide reasonable protection against harmful interference. This equipment generates, uses and can radiate radio frequency energy and if not installed and used in accordance with the instructions may cause harmful interference to radio or television reception. However, there is no guarantee that harmful interference will not occur in a particular installation. If this equipment does cause interference to radio or television reception, which can be determined by turning the equipment on and off, the user is encouraged to correct the interference with one or more of the following measures: (a) Reorient or relocate the receiving antenna. (b) Increase the separation between the equipment and the receiver. (c) Connect the equipment to an outlet on a circuit different from that to which the receiver is connected. (d) Consult the supplier or an experienced radio/TV technician for help.

FCC Compliance Statement (United States)

This equipment generates, uses and can radiate radio frequency energy and if not installed and used properly, that is, in strict accordance with the manufacturer's instructions, may cause interference to radio communication. It has been tested and found to comply with the limits for a class A computing device in accordance with the specifications in Subpart J of part 15 of FCC rules, which are designed to provide reasonable protection against such interference when the equipment is operated in a commercial environment. Operation of this equipment in a residential area may cause interference, in which case the user at his own expense will be required to take whatever measures may be necessary to correct the interference. Changes or modifications not expressly approved by the manufacturer could void the user's authority to operate the equipment.

Canadian Department of Communications RFI statement

This equipment does not exceed the class A limits for radio noise emissions from digital apparatus set out in the radio interference regulations of the Canadian Department of Communications.

Le présent appareil numérique n'émet pas de bruits radioélectriques dépassant les limites applicables aux appareils numériques de la classe A prescrites dans le règlement sur le brouillage radioélectriques publié par le ministère des Communications du Canada.

© 2004 Adder Technology Limited
All trademarks are acknowledged.
Release 1.0d
December 2004
Part No. ADD0055

Adder Technology Limited,
Technology House,
Trafalgar Way, Bar Hill,
Cambridge, CB3 8SQ,
United Kingdom
Tel: +44 (0)1954 780044
Fax: +44 (0)1954 780081

Adder Corporation,
29 Water Street,
Newburyport,
MA 01950,
United States of America
Tel: +1-888-932-3337
Fax: +1-888-275-1117

Documentation by: CORPORATE TEXT & DESIGN www.ctxd.com